DRAWING NOT TO BE USED FOR CONSTRUCTION

GENERAL NOTES:

1. ALL DIMENSIONS INDICATED ARE IN MILLIMETERS (INCHES) UNLESS OTHERWISE SPECIFIED.
2. JELLYFISH STRUCTURE INLET AND OUTLET PIPE SIZE AND ORIENTATION SHOWN FOR INFORMATIONAL PURPOSES ONLY.
3. UNLESS OTHERWISE NOTED, BYPASS INFRASTRUCTURE, SUCH AS ALL UPSTREAM DIVERSION STRUCTURES, CONNECTING STRUCTURES, OR PIPE CONDUITS CONNECTING TO COMPLETE THE JELLYFISH SYSTEM SHALL BE PROVIDED AND ADDRESSED SEPARATELY.
4. DRAWING FOR INFORMATION PURPOSES ONLY. REFER TO ENGINEER'S SITE/UTILITY PLAN FOR STRUCTURE ORIENTATION.
5. NO PRODUCT SUBSTITUTIONS SHALL BE ACCEPTED UNLESS SUBMITTED 10 DAYS PRIOR TO PROJECTS BID DATE, OR AS DIRECTED BY THE ENGINEER OF RECORD.

JELLYFISH STRUCTURE & DESIGN NOTES:

1. 762 MM Ø (30") MAINTENANCE ACCESS WALL TO BE USED FOR CLEANOUT AND ACCESS BELOW CARTRIDGE DECK.
2. CASTINGS OR DOORS OF THE JELLYFISH MANHOLE STRUCTURE TO EXTEND TO DESIGN FINISH GRADE. DEPTHS IN EXCESS OF 3.65 M (12') MAY REQUIRE THE DESIGN AND INSTALLATION OF INTERMEDIATE SAFETY GRATES OR OTHER STRUCTURAL ELEMENTS.
3. CASTINGS AND GRADE RINGS, OR DOORS AND DOOR RISERS, OR BOTH, SHALL BE GROUTED FOR WATERTIGHTNESS.
   STRUCTURE SHALL MEET AASHTO HS-20, ASSUMING EARTH COVER OF 0' - 3', AND GROUNDWATER ELEVATION AT, OR BELOW, THE OUTLET PIPE INVERT ELEVATION. ENGINEER OF RECORD TO CONFIRM ACTUAL GROUNDWATER ELEVATION. CASTINGS SHALL MEET AASHTO M306 LOAD RATING AND BE CAST WITH THE IMBRIUM LOGO.
4. ALL STRUCTURAL SECTIONS AND PARTS TO MEET OR EXCEED ASTM C-478, ASTM C-443, AND ASTM D-4097 CORRESPONDING TO AASHTO SPECIFICATIONS, AND ANY OTHER SITE OR LOCAL STANDARDS.
5. CONCRETE RISER SECTIONS FROM BOTTOM TO TOP WILL BE ADDED AS REQUIRED INCLUDING TRANSITION PIECES TO SMALLER DIAMETER RISERS FOR SURFACE ACCESSES WHERE WARRANTED BY SERVICING DEPTH.
6. IF MINIMUM DEPTH FROM TOP OF CARTRIDGE DECK TO BOTTOM OF STRUCTURAL TOP SLAB CANNOT BE ACHIEVED DUE TO PIPING INVERT ELEVATIONS OR OTHER SITE CONSTRAINTS. ALTERNATIVE HATCH CONFIGURATIONS MAY BE AVAILABLE. HATCH DOORS SHOULD BE SIZED TO PROVIDE FULL ACCESS ABOVE THE CARTRIDGES TO ACCOMMODATE MAINTENANCE.
7. STEPS TO BE APPROXIMATELY 330 MM (13") APART AND DIMENSIONS MUST MEET LOCAL STANDARDS. STEPS MUST BE INSTALLED AFTER CARTRIDGE DECK IS IN PLACE.
8. CONFIGURATION OF INLET AND OUTLET PIPE CAN VARY TO MEET SITE'S NEEDS.
9. IT IS THE RESPONSIBILITY OF OTHERS TO PROPERLY PROTECT THE TREATMENT DEVICE, AND KEEP THE DEVICE OFFLINE DURING CONSTRUCTION. FILTER CARTRIDGES SHALL NOT BE INSTALLED UNTIL THE PROJECT SITE IS CLEAN AND FREE OF DEBRIS, BY OTHERS. THE PROJECT SITE INCLUDES ANY SURFACE THAT CONTRIBUTES STORM DRAINAGE TO THE TREATMENT DEVICE. CARTRIDGES SHALL BE FURNISHED NEW, AT THE TIME OF FINAL ACCEPTANCE.
10. THIS DRAWING MUST BE VIEWED IN CONJUNCTION WITH THE STANDARD JELLYFISH SPECIFICATION, AND STORMWATER QUALITY FILTER TREATMENT JELLYFISH DOCUMENTS.

INSTALLATION NOTES

A. ANY SUB-BASE, BACKFILL DEPTH, AND/OR ANTI-FLOTATION PROVISIONS ARE SITE-SPECIFIC DESIGN CONSIDERATIONS AND SHALL BE SPECIFIED BY ENGINEER OF RECORD.
B. CONTRACTOR TO PROVIDE EQUIPMENT WITH SUFFICIENT LIFTING AND REACH CAPACITY TO LIFT AND SET THE STRUCTURE (LIFTING CLUTCHES PROVIDED)
C. CONTRACTOR WILL INSTALL AND LEVEL THE STRUCTURE, SEALING THE JOINTS, LINE ENTRY AND EXIT POINTS (NON-SHRINK GROUT WITH APPROVED WATERSTOP OR FLEXIBLE BOOT)
D. CONTRACTOR TO TAKE APPROPRIATE MEASURES TO PROTECT CARTRIDGES FROM CONSTRUCTION-RELATED EROSION RUNOFF.
E. CARTRIDGE INSTALLATION, BY IMBRIUM, SHALL OCCUR ONLY AFTER SITE HAS BEEN STABILIZED AND THE JELLYFISH UNIT IS CLEAN AND FREE OF DEBRIS. CONTACT IMBRIUM TO COORDINATE CARTRIDGE INSTALLATION WITH SITE STABILIZATION.

STANDARD OFFLINE JELLYFISH RECOMMENDED PIPE DIAMETERS			
MODEL DIAMETER (m)	MINIMUM ANGLE INLET/OUTLET PIPES	MINIMUM INLET PIPE DIAMETER (mm)	MINIMUM OULTET PIPE DIAMETER (mm)
1.2	62	150	200
1.8	59	200	250
2.4	52	250	300
3.0	48	300	450
3.6	40	300	450
CONTACT IMBRIUM SYSTEMS FOR ALTERNATE PIPE DIAMETERS			

FOR SITE SPECIFIC DRAWINGS PLEASE CONTACT YOUR LOCAL JELLYFISH FILTER REPRESENTATIVE. SITE SPECIFIC DRAWINGS ARE BASED ON THE BEST AVAILABLE INFORMATION AT THE TIME. SOME FIELD REVISIONS TO THE SYSTEM LOCATION OR CONNECTION PIPING MAY BE NECESSARY BASED ON AVAILABLE SPACE OR SITE CONFIGURATION REVISIONS. ELEVATIONS SHOULD BE MAINTAINED EXCEPT WHERE NOTED ON BYPASS STRUCTURE.

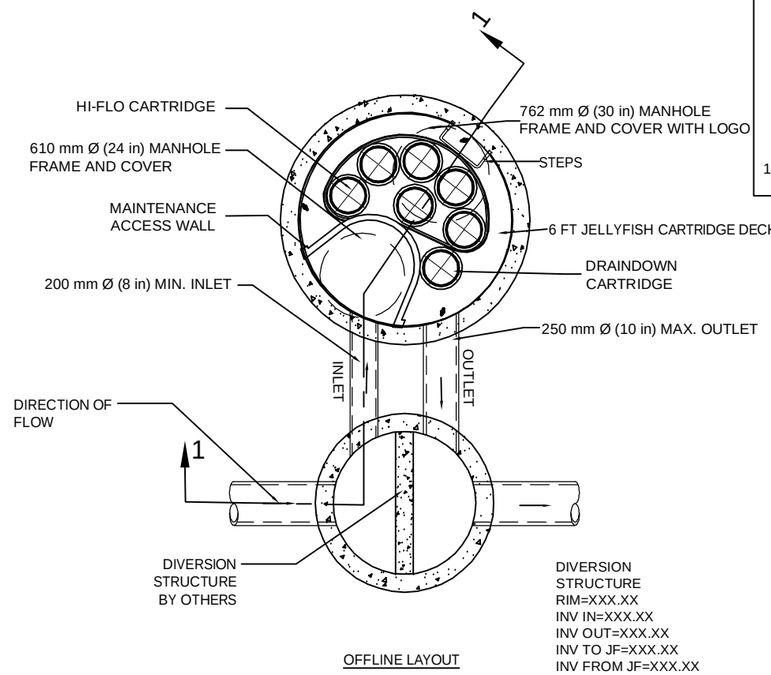

OFFLINE LAYOUT

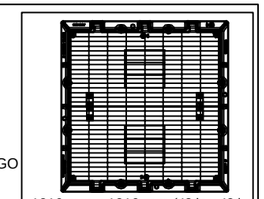

1219 mm x 1219 mm (48 in x 48 i
OPTIONAL HATCH

UPSTREAM DIVERSION STRUCTURE

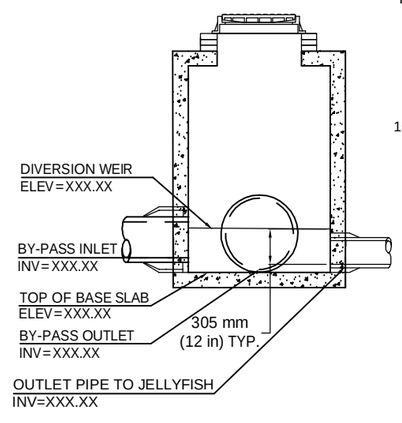

JELLYFISH FILTER

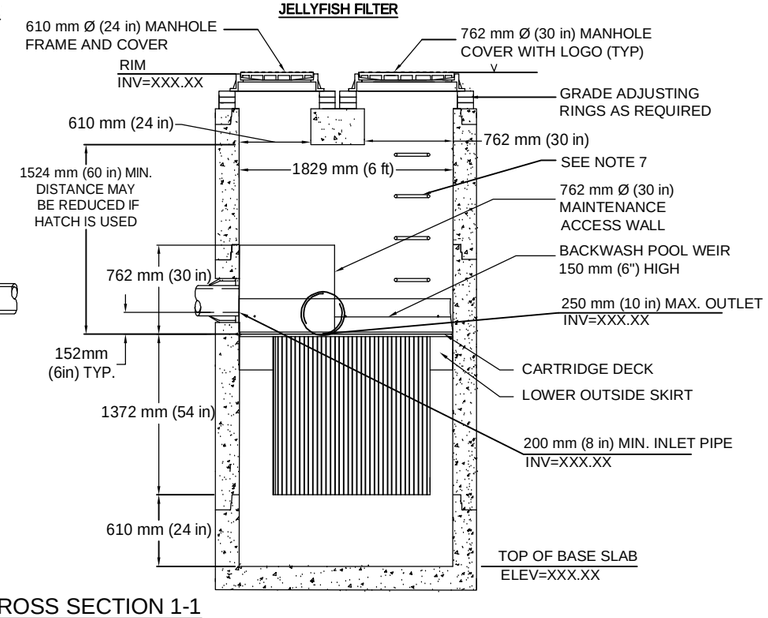

CROSS SECTION 1-1

JELLYFISH DESIGN NOTES

JELLYFISH TREATMENT CAPACITY IS A FUNCTION OF THE CARTRIDGE SELECTION AND THE NUMBER OF CARTRIDGES. THE STANDARD MANHOLE STYLE IS SHOWN. Ø1829 mm (72") MANHOLE JELLYFISH PEAK TREATMENT CAPACITY IS 32.8 L/s (1.16 CFS). TREATMENT FLOW RATE IS BASED ON 457 MM (18") OF HEAD PRESSURE.

CARTRIDGE SELECTION	54"	40"	27"	15"
CARTRIDGE DEPTH	90"	76"	63"	51"
OUTLET INVERT TO STRUCTURE BASE SLAB	5.09 / 2.55	3.68 / 1.84	2.55 / 1.27	1.41 / 0.71
FLOW RATE HIGH-FLO / DRAINDOWN (L/s) (per cart)	57 / 28	42 / 21	28 / 14	16 / 8
SEDIMENT CAPACITY HIGH-FLO / DRAINDOWN (kg) (per cart)	6 / 1			
MAX. CARTS HIGH-FLO/DRAINDOWN	370	273	182	104
MAX. SEDIMENT CAPACITY (kg)	32.8	24.6	16.4	9.06
MAX. TREATMENT (L/s)				

SITE SPECIFIC DATA REQUIREMENTS

JELLYFISH MODEL	*				
STRUCTURE ID					*
WATER QUALITY FLOW RATE (L/s)					*
PEAK FLOW RATE (L/s)					*
RETURN PERIOD OF PEAK FLOW (yrs)					*
# OF CARTRIDGES REQUIRED (HF / DD)					*
CARTRIDGE SIZE (inches)					*
PIPE DATA:	I.E.	MAT'L	DIA	SLOPE %	HGL
INLET #1	*	*	*	*	*
INLET #2	*	*	*	*	*
OUTLET	*	*	*	*	*

* PER ENGINEER OF RECORD

MARK	DATE	REVISION DESCRIPTION	BY
#	#	#	#
#	#	#	#
#	#	#	#
1	08/01/2015	NOTES	BSF
0	10/01/2014	INTIAL RELEASE	BSF

The design and information shown on this drawing is provided as a service to the project owner, engineer and contractor by Imbrium Systems. Neither this drawing, nor any part thereof, may be used, reproduced or modified in any manner without the prior written consent of Imbrium. Failure to comply is done at the user's own risk and Imbrium expressly disclaims any liability or responsibility for such use.

If discrepancies between the supplied information upon which the drawing is based and actual field conditions are encountered as site work progresses, these discrepancies must be reported to Imbrium immediately for re-evaluation of the design. Imbrium accepts no liability for designs based on missing, incomplete or inaccurate information supplied by others.

Jellyfish®
JF6 STANDARD
Scale = 1:50

www.imbriumsystems.com info@imbriumsystems.com

imbrium®
407 FAIRVIEW DRIVE, WHITBY, ON L1N 3A9
TF 800-565-4801 CA 416-960-9900 INTL +1-416-960-9900
Jellyfish® Filter
THIS PRODUCT MAY BE PROTECTED BY ONE OR MORE OF THE FOLLOWING PATENTS: CA 2,518,776 US 7,625,482 EP 1 915 493 B1 AU 2006 352 116 CN ZL 200680 055 276.3 US 8,303,798 B2 EP 2 086 904 B1 AU 2007 319 127 CN ZL 200780 047 328.8 US 8,431,003 B2 EP 2 418 193 B1 AU 2010 201 718 CN ZL 201010 237 963.5 US 8,622,222 B2 EP 2 420 480 B1 AU 2011 202 411 CN ZL 201110 207 312.4 US 8,758,626 B2 EP 2 622 147 B1 AU 2011 324 510 CN ZL 201180 057 161.1 US 8,771,507 B2 EP 2 628 188 B1 AU 2012 318 184 CN ZL 201280 051 064.7 US 9,016,477 B2 EP 2 747 641 B1 AU 2013 370 448 CN ZL 201380 069 057.7 US 9,039,915 B2 EP 2 904 417 B1 AU 2014 321 375 CN ZL 201480 053 349.2 US 9,086,202 B2 EP 2 924 413 B1 AU 2014 371 292 CN ZL 201480 070 932.7 US 9,120,622 B2 EP 2 960 210 B1 AU 2015 252 039 CN ZL 201580 032 075.8 US 9,150,432 B2 EP 3 000 771 B1 AU 2015 271 915 CN ZL 201580 046 990.X US 9,173,797 B2 EP 3 000 773 B1 AU 2015 271 916 CN ZL 201580 046 992.9 US 9,206,864 B2 EP 3 000 774 B1 AU 2015 271 917 CN ZL 201580 046 993.3 US 9,327,206 B2 EP 3 000 775 B1 AU 2015 271 918 CN ZL 201580 046 994.8 US 9,334,634 B2 EP 3 000 776 B1 AU 2015 271 919 CN ZL 201580 046 995.2 US 9,452,368 B2 EP 3 000 777 B1 AU 2015 271 920 CN ZL 201580 046 996.7 US 9,504,949 B2 EP 3 000 778 B1 AU 2015 271 921 CN ZL 201580 046 997.1 US 9,649,592 B2 EP 3 000 779 B1 AU 2015 271 922 CN ZL 201580 046 998.6 US 9,861,920 B2 EP 3 000 780 B1 AU 2015 271 923 CN ZL 201580 046 999.0 US 9,861,921 B2 EP 3 000 781 B1 AU 2015 271 924 CN ZL 201580 047 000.3 US 9,861,922 B2 EP 3 000 782 B1 AU 2015 271 925 CN ZL 201580 047 001.8 US 9,861,923 B2 EP 3 000 783 B1 AU 2015 271 926 CN ZL 201580 047 002.2 US 9,861,924 B2 EP 3 000 784 B1 AU 2015 271 927 CN ZL 201580 047 003.7 US 9,861,925 B2 EP 3 000 785 B1 AU 2015 271 928 CN ZL 201580 047 004.1 US 9,861,926 B2 EP 3 000 786 B1 AU 2015 271 929 CN ZL 201580 047 005.6 US 9,861,927 B2 EP 3 000 787 B1 AU 2015 271 930 CN ZL 201580 047 006.0 US 9,861,928 B2 EP 3 000 788 B1 AU 2015 271 931 CN ZL 201580 047 007.5 US 9,861,929 B2 EP 3 000 789 B1 AU 2015 271 932 CN ZL 201580 047 008.9 US 9,861,930 B2 EP 3 000 790 B1 AU 2015 271 933 CN ZL 201580 047 009.4 US 9,861,931 B2 EP 3 000 791 B1 AU 2015 271 934 CN ZL 201580 047 010.9 US 9,861,932 B2 EP 3 000 792 B1 AU 2015 271 935 CN ZL 201580 047 011.4 US 9,861,933 B2 EP 3 000 793 B1 AU 2015 271 936 CN ZL 201580 047 012.9 US 9,861,934 B2 EP 3 000 794 B1 AU 2015 271 937 CN ZL 201580 047 013.4 US 9,861,935 B2 EP 3 000 795 B1 AU 2015 271 938 CN ZL 201580 047 014.9 US 9,861,936 B2 EP 3 000 796 B1 AU 2015 271 939 CN ZL 201580 047 015.4 US 9,861,937 B2 EP 3 000 797 B1 AU 2015 271 940 CN ZL 201580 047 016.9 US 9,861,938 B2 EP 3 000 798 B1 AU 2015 271 941 CN ZL 201580 047 017.4 US 9,861,939 B2 EP 3 000 799 B1 AU 2015 271 942 CN ZL 201580 047 018.9 US 9,861,940 B2 EP 3 000 800 B1 AU 2015 271 943 CN ZL 201580 047 019.4 US 9,861,941 B2 EP 3 000 801 B1 AU 2015 271 944 CN ZL 201580 047 020.9 US 9,861,942 B2 EP 3 000 802 B1 AU 2015 271 945 CN ZL 201580 047 021.4 US 9,861,943 B2 EP 3 000 803 B1 AU 2015 271 946 CN ZL 201580 047 022.9 US 9,861,944 B2 EP 3 000 804 B1 AU 2015 271 947 CN ZL 201580 047 023.4 US 9,861,945 B2 EP 3 000 805 B1 AU 2015 271 948 CN ZL 201580 047 024.9 US 9,861,946 B2 EP 3 000 806 B1 AU 2015 271 949 CN ZL 201580 047 025.4 US 9,861,947 B2 EP 3 000 807 B1 AU 2015 271 950 CN ZL 201580 047 026.9 US 9,861,948 B2 EP 3 000 808 B1 AU 2015 271 951 CN ZL 201580 047 027.4 US 9,861,949 B2 EP 3 000 809 B1 AU 2015 271 952 CN ZL 201580 047 028.9 US 9,861,950 B2 EP 3 000 810 B1 AU 2015 271 953 CN ZL 201580 047 029.4 US 9,861,951 B2 EP 3 000 811 B1 AU 2015 271 954 CN ZL 201580 047 030.9 US 9,861,952 B2 EP 3 000 812 B1 AU 2015 271 955 CN ZL 201580 047 031.4 US 9,861,953 B2 EP 3 000 813 B1 AU 2015 271 956 CN ZL 201580 047 032.9 US 9,861,954 B2 EP 3 000 814 B1 AU 2015 271 957 CN ZL 201580 047 033.4 US 9,861,955 B2 EP 3 000 815 B1 AU 2015 271 958 CN ZL 201580 047 034.9 US 9,861,956 B2 EP 3 000 816 B1 AU 2015 271 959 CN ZL 201580 047 035.4 US 9,861,957 B2 EP 3 000 817 B1 AU 2015 271 960 CN ZL 201580 047 036.9 US 9,861,958 B2 EP 3 000 818 B1 AU 2015 271 961 CN ZL 201580 047 037.4 US 9,861,959 B2 EP 3 000 819 B1 AU 2015 271 962 CN ZL 201580 047 038.9 US 9,861,960 B2 EP 3 000 820 B1 AU 2015 271 963 CN ZL 201580 047 039.4 US 9,861,961 B2 EP 3 000 821 B1 AU 2015 271 964 CN ZL 201580 047 040.9 US 9,861,962 B2 EP 3 000 822 B1 AU 2015 271 965 CN ZL 201580 047 041.4 US 9,861,963 B2 EP 3 000 823 B1 AU 2015 271 966 CN ZL 201580 047 042.9 US 9,861,964 B2 EP 3 000 824 B1 AU 2015 271 967 CN ZL 201580 047 043.4 US 9,861,965 B2 EP 3 000 825 B1 AU 2015 271 968 CN ZL 201580 047 044.9 US 9,861,966 B2 EP 3 000 826 B1 AU 2015 271 969 CN ZL 201580 047 045.4 US 9,861,967 B2 EP 3 000 827 B1 AU 2015 271 970 CN ZL 201580 047 046.9 US 9,861,968 B2 EP 3 000 828 B1 AU 2015 271 971 CN ZL 201580 047 047.4 US 9,861,969 B2 EP 3 000 829 B1 AU 2015 271 972 CN ZL 201580 047 048.9 US 9,861,970 B2 EP 3 000 830 B1 AU 2015 271 973 CN ZL 201580 047 049.4 US 9,861,971 B2 EP 3 000 831 B1 AU 2015 271 974 CN ZL 201580 047 050.9 US 9,861,972 B2 EP 3 000 832 B1 AU 2015 271 975 CN ZL 201580 047 051.4 US 9,861,973 B2 EP 3 000 833 B1 AU 2015 271 976 CN ZL 201580 047 052.9 US 9,861,974 B2 EP 3 000 834 B1 AU 2015 271 977 CN ZL 201580 047 053.4 US 9,861,975 B2 EP 3 000 835 B1 AU 2015 271 978 CN ZL 201580 047 054.9 US 9,861,976 B2 EP 3 000 836 B1 AU 2015 271 979 CN ZL 201580 047 055.4 US 9,861,977 B2 EP 3 000 837 B1 AU 2015 271 980 CN ZL 201580 047 056.9 US 9,861,978 B2 EP 3 000 838 B1 AU 2015 271 981 CN ZL 201580 047 057.4 US 9,861,979 B2 EP 3 000 839 B1 AU 2015 271 982 CN ZL 201580 047 058.9 US 9,861,980 B2 EP 3 000 840 B1 AU 2015 271 983 CN ZL 201580 047 059.4 US 9,861,981 B2 EP 3 000 841 B1 AU 2015 271 984 CN ZL 201580 047 060.9 US 9,861,982 B2 EP 3 000 842 B1 AU 2015 271 985 CN ZL 201580 047 061.4 US 9,861,983 B2 EP 3 000 843 B1 AU 2015 271 986 CN ZL 201580 047 062.9 US 9,861,984 B2 EP 3 000 844 B1 AU 2015 271 987 CN ZL 201580 047 063.4 US 9,861,985 B2 EP 3 000 845 B1 AU 2015 271 988 CN ZL 201580 047 064.9 US 9,861,986 B2 EP 3 000 846 B1 AU 2015 271 989 CN ZL 201580 047 065.4 US 9,861,987 B2 EP 3 000 847 B1 AU 2015 271 990 CN ZL 201580 047 066.9 US 9,861,988 B2 EP 3 000 848 B1 AU 2015 271 991 CN ZL 201580 047 067.4 US 9,861,989 B2 EP 3 000 849 B1 AU 2015 271 992 CN ZL 201580 047 068.9 US 9,861,990 B2 EP 3 000 850 B1 AU 2015 271 993 CN ZL 201580 047 069.4 US 9,861,991 B2 EP 3 000 851 B1 AU 2015 271 994 CN ZL 201580 047 070.9 US 9,861,992 B2 EP 3 000 852 B1 AU 2015 271 995 CN ZL 201580 047 071.4 US 9,861,993 B2 EP 3 000 853 B1 AU 2015 271 996 CN ZL 201580 047 072.9 US 9,861,994 B2 EP 3 000 854 B1 AU 2015 271 997 CN ZL 201580 047 073.4 US 9,861,995 B2 EP 3 000 855 B1 AU 2015 271 998 CN ZL 201580 047 074.9 US 9,861,996 B2 EP 3 000 856 B1 AU 2015 271 999 CN ZL 201580 047 075.4 US 9,861,997 B2 EP 3 000 857 B1 AU 2015 272 000 CN ZL 201580 047 076.9 US 9,861,998 B2 EP 3 000 858 B1 AU 2015 272 001 CN ZL 201580 047 077.4 US 9,861,999 B2 EP 3 000 859 B1 AU 2015 272 002 CN ZL 201580 047 078.9 US 9,862,000 B2 EP 3 000 860 B1 AU 2015 272 003 CN ZL 201580 047 079.4 US 9,862,001 B2 EP 3 000 861 B1 AU 2015 272 004 CN ZL 201580 047 080.9 US 9,862,002 B2 EP 3 000 862 B1 AU 2015 272 005 CN ZL 201580 047 081.4 US 9,862,003 B2 EP 3 000 863 B1 AU 2015 272 006 CN ZL 201580 047 082.9 US 9,862,004 B2 EP 3 000 864 B1 AU 2015 272 007 CN ZL 201580 047 083.4 US 9,862,005 B2 EP 3 000 865 B1 AU 2015 272 008 CN ZL 201580 047 084.9 US 9,862,006 B2 EP 3 000 866 B1 AU 2015 272 009 CN ZL 201580 047 085.4 US 9,862,007 B2 EP 3 000 867 B1 AU 2015 272 010 CN ZL 201580 047 086.9 US 9,862,008 B2 EP 3 000 868 B1 AU 2015 272 011 CN ZL 201580 047 087.4 US 9,862,009 B2 EP 3 000 869 B1 AU 2015 272 012 CN ZL 201580 047 088.9 US 9,862,010 B2 EP 3 000 870 B1 AU 2015 272 013 CN ZL 201580 047 089.4 US 9,862,011 B2 EP 3 000 871 B1 AU 2015 272 014 CN ZL 201580 047 090.9 US 9,862,012 B2 EP 3 000 872 B1 AU 2015 272 015 CN ZL 201580 047 091.4 US 9,862,013 B2 EP 3 000 873 B1 AU 2015 272 016 CN ZL 201580 047 092.9 US 9,862,014 B2 EP 3 000 874 B1 AU 2015 272 017 CN ZL 201580 047 093.4 US 9,862,015 B2 EP 3 000 875 B1 AU 2015 272 018 CN ZL 201580 047 094.9 US 9,862,016 B2 EP 3 000 876 B1 AU 2015 272 019 CN ZL 201580 047 095.4 US 9,862,017 B2 EP 3 000 877 B1 AU 2015 272 020 CN ZL 201580 047 096.9 US 9,862,018 B2 EP 3 000 878 B1 AU 2015 272 021 CN ZL 201580 047 097.4 US 9,862,019 B2 EP 3 000 879 B1 AU 2015 272 022 CN ZL 201580 047 098.9 US 9,862,020 B2 EP 3 000 880 B1 AU 2015 272 023 CN ZL 201580 047 099.4 US 9,862,021 B2 EP 3 000 881 B1 AU 2015 272 024 CN ZL 201580 047 100.9 US 9,862,022 B2 EP 3 000 882 B1 AU 2015 272 025 CN ZL 201580 047 101.4 US 9,862,023 B2 EP 3 000 883 B1 AU 2015 272 026 CN ZL 201580 047 102.9 US 9,862,024 B2 EP 3 000 884 B1 AU 2015 272 027 CN ZL 201580 047 103.4 US 9,862,025 B2 EP 3 000 885 B1 AU 2015 272 028 CN ZL 201580 047 104.9 US 9,862,026 B2 EP 3 000 886 B1 AU 2015 272 029 CN ZL 201580 047 105.4 US 9,862,027 B2 EP 3 000 887 B1 AU 2015 272 030 CN ZL 201580 047 106.9 US 9,862,028 B2 EP 3 000 888 B1 AU 2015 272 031 CN ZL 201580 047 107.4 US 9,862,029 B2 EP 3 000 889 B1 AU 2015 272 032 CN ZL 201580 047 108.9 US 9,862,030 B2 EP 3 000 890 B1 AU 2015 272 033 CN ZL 201580 047 109.4 US 9,862,031 B2 EP 3 000 891 B1 AU 2015 272 034 CN ZL 201580 047 110.9 US 9,862,032 B2 EP 3 000 892 B1 AU 2015 272 035 CN ZL 201580 047 111.4 US 9,862,033 B2 EP 3 000 893 B1 AU 2015 272 036 CN ZL 201580 047 112.9 US 9,862,034 B2 EP 3 000 894 B1 AU 2015 272 037 CN ZL 201580 047 113.4 US 9,862,035 B2 EP 3 000 895 B1 AU 2015 272 038 CN ZL 201580 047 114.9 US 9,862,036 B2 EP 3 000 896 B1 AU 2015 272 039 CN ZL 201580 047 115.4 US 9,862,037 B2 EP 3 000 897 B1 AU 2015 272 040 CN ZL 201580 047 116.9 US 9,862,038 B2 EP 3 000 898 B1 AU 2015 272 041 CN ZL 201580 047 117.4 US 9,862,039 B2 EP 3 000 899 B1 AU 2015 272 042 CN ZL 201580 047 118.9 US 9,862,040 B2 EP 3 000 900 B1 AU 2015 272 043 CN ZL 201580 047 119.4 US 9,862,041 B2 EP 3 000 901 B1 AU 2015 272 044 CN ZL 201580 047 120.9 US 9,862,042 B2 EP 3 000 902 B1 AU 2015 272 045 CN ZL 201580 047 121.4 US 9,862,043 B2 EP 3 000 903 B1 AU 2015 272 046 CN ZL 201580 047 122.9 US 9,862,044 B2 EP 3 000 904 B1 AU 2015 272 047 CN ZL 201580 047 123.4 US 9,862,045 B2 EP 3 000 905 B1 AU 2015 272 048 CN ZL 201580 047 124.9 US 9,862,046 B2 EP 3 000 906 B1 AU 2015 272 049 CN ZL 201580 047 125.4 US 9,862,047 B2 EP 3 000 907 B1 AU 2015 272 050 CN ZL 201580 047 126.9 US 9,862,048 B2 EP 3 000 908 B1 AU 2015 272 051 CN ZL 201580 047 127.4 US 9,862,049 B2 EP 3 000 909 B1 AU 2015 272 052 CN ZL 201580 047 128.9 US 9,862,050 B2 EP 3 000 910 B1 AU 2015 272 053 CN ZL 201580 047 129.4 US 9,862,051 B2 EP 3 000 911 B1 AU 2015 272 054 CN ZL 201580 047 130.9 US 9,862,052 B2 EP 3 000 912 B1 AU 2015 272 055 CN ZL 201580 047 131.4 US 9,862,053 B2 EP 3 000 913 B1 AU 2015 272 056 CN ZL 201580 047 132.9 US 9,862,054 B2 EP 3 000 914 B1 AU 2015 272 057 CN ZL 201580 047 133.4 US 9,862,055 B2 EP 3 000 915 B1 AU 2015 272 058 CN ZL 201580 047 134.9 US 9,862,056 B2 EP 3 000 916 B1 AU 2015 272 059 CN ZL 201580 047 135.4 US 9,862,057 B2 EP 3 000 917 B1 AU 2015 272 060 CN ZL 201580 047 136.9 US 9,862,058 B2 EP 3 000 918 B1 AU 2015 272 061 CN ZL 201580 047 137.4 US 9,862,059 B2 EP 3 000 919 B1 AU 2015 272 062 CN ZL 201580 047 138.9 US 9,862,060 B2 EP 3 000 920 B1 AU 2015 272 063 CN ZL 201580 047 139.4 US 9,862,061 B2 EP 3 000 921 B1 AU 2015 272 064 CN ZL 201580 047 140.9 US 9,862,062 B2 EP 3 000 922 B1 AU 2015 272 065 CN ZL 201580 047 141.4 US 9,862,063 B2 EP 3 000 923 B1 AU 2015 272 066 CN ZL 201580 047 142.9 US 9,862,064 B2 EP 3 000 924 B1 AU 2015 272 067 CN ZL 201580 047 143.4 US 9,862,065 B2 EP 3 000 925 B1 AU 2015 272 068 CN ZL 201580 047 144.9 US 9,862,066 B2 EP 3 000 926 B1 AU 2015 272 069 CN ZL 201580 047 145.4 US 9,862,067 B2 EP 3 000 927 B1 AU 2015 272 070 CN ZL 201580 047 146.9 US 9,862,068 B2 EP 3 000 928 B1 AU 2015 272 071 CN ZL 201580 047 147.4 US 9,862,069 B2 EP 3 000 929 B1 AU 2015 272 072 CN ZL 201580 047 148.9 US 9,862,070 B2 EP 3 000 930 B1 AU 2015 272 073 CN ZL 201580 047 149.4 US 9,862,071 B2 EP 3 000 931 B1 AU 2015 272 074 CN ZL 201580 047 150.9 US 9,862,072 B2 EP 3 000 932 B1 AU 2015 272 075 CN ZL 201580 047 151.4 US 9,862,073 B2 EP 3 000 933 B1 AU 2015 272 076 CN ZL 201580 047 152.9 US 9,862,074 B2 EP 3 000 934 B1 AU 2015 272 077 CN ZL 201580 047 153.4 US 9,862,075 B2 EP 3 000 935 B1 AU 2015 272 078 CN ZL 201580 047 154.9 US 9,862,076 B2 EP 3 000 936 B1 AU 2015 272 079 CN ZL 201580 047 155.4 US 9,862,077 B2 EP 3 000 937 B1 AU 2015 272 080 CN ZL 201580 047 156.9 US 9,862,078 B2 EP 3 000 938 B1 AU 2015 272 081 CN ZL 201580 047 157.4 US 9,862,079 B2 EP 3 000 939 B1 AU 2015 272 082 CN ZL 201580 047 158.9 US 9,862,080 B2 EP 3 000 940 B1 AU 2015 272 083 CN ZL 201580 047 159.4 US 9,862,081 B2 EP 3 000 941 B1 AU 2015 272 084 CN ZL 201580 047 160.9 US 9,862,082 B2 EP 3 000 942 B1 AU 2015 272 085 CN ZL 201580 047 161.4 US 9,862,083 B2 EP 3 000 943 B1 AU 2015 272 086 CN ZL 201580 047 162.9 US 9,862,084 B2 EP 3 000 944 B1 AU 2015 272 087 CN ZL 201580 047 163.4 US 9,862,085 B2 EP 3 000 945 B1 AU 2015 272 088 CN ZL 201580 047 164.9 US 9,862,086 B2 EP 3 000 946 B1 AU 2015 272 089 CN ZL 201580 047 165.4 US 9,862,087 B2 EP 3 000 947 B1 AU 2015 272 090 CN ZL 201580 047 166.9 US 9,862,088 B2 EP 3 000 948 B1 AU 2015 272 091 CN ZL 201580 047 167.4 US 9,862,089 B2 EP 3 000 949 B1 AU 2015 272 092 CN ZL 201580 047 168.9 US 9,862,090 B2 EP 3 000 950 B1 AU 2015 272 093 CN ZL 201580 047 169.4 US 9,862,091 B2 EP 3 000 951 B1 AU 2015 272 094 CN ZL 201580 047 170.9 US 9,862,092 B2 EP 3 000 952 B1 AU 2015 272 095 CN ZL 201580 047 171.4 US 9,862,093 B2 EP 3 000 953 B1 AU 2015 272 096 CN ZL 201580 047 172.9 US 9,862,094 B2 EP 3 000 954 B1 AU 2015 272 097 CN ZL 201580 047 173.4 US 9,862,095 B2 EP 3 000 955 B1 AU 2015 272 098 CN ZL 201580 047 174.9 US 9,862,096 B2 EP 3 000 956 B1 AU 2015 272 099 CN ZL 201580 047 175.4 US 9,862,097 B2 EP 3 000 957 B1 AU 2015 272 100 CN ZL 201580 047 176.9 US 9,862,098 B2 EP 3 000 958 B1 AU 2015 272 101 CN ZL 201580 047 177.4 US 9,862,099 B2 EP 3 000 959 B1 AU 2015 272 102 CN ZL 201580 047 178.9 US 9,862,100 B2 EP 3 000 960 B1 AU 2015 272 103 CN ZL 201580 047 179.4 US 9,862,101 B2 EP 3 000 961 B1 AU 2015 272 104 CN ZL 201580 047 180.9 US 9,862,102 B2 EP 3 000 962 B1 AU 2015 272 105 CN ZL 201580 047 181.4 US 9,862,103 B2 EP 3 000 963 B1 AU 2015 272 106 CN ZL 201580 047 182.9 US 9,862,104 B2 EP 3 000 964 B1 AU 2015 272 107 CN ZL 201580 047 183.4 US 9,862,105 B2 EP 3 000 965 B1 AU 2015 272 108 CN ZL 201580 047 184.9 US 9,862,106 B2 EP 3 000 966 B1 AU 2015 272 109 CN ZL 201580 047 185.4 US 9,862,107 B2 EP 3 000 967 B1 AU 2015 272 110 CN ZL 201580 047 186.9 US 9,862,108 B2 EP 3 000 968 B1 AU 2015 272 111 CN ZL 201580 047 187.4 US 9,862,109 B2 EP 3 000 969 B1 AU 2015 272 112 CN ZL 201580 047 188.9 US 9,862,110 B2 EP 3 000 970 B1 AU 2015 272 113 CN ZL 201580 047 189.4 US 9,862,111 B2 EP 3 000 971 B1 AU 2015 272 114 CN ZL 201580 047 190.9 US 9,862,112 B2 EP 3 000 972 B1 AU 2015 272 115 CN ZL 201580 047 191.4 US 9,862,113 B2 EP 3 000 973 B1 AU 2015 272 116 CN ZL 201580 047 192.9 US 9,862,114 B2 EP 3

JELLYFISH® FILTER - SPECIFICATIONS

GENERAL

A. WORK INCLUDED: SPECIFIES REQUIREMENTS FOR CONSTRUCTION AND PERFORMANCE OF AN UNDERGROUND STORMWATER QUALITY, MEMBRANE FILTRATION, AND TREATMENT DEVICE THAT REMOVES POLLUTANTS FROM STORMWATER RUNOFF THROUGH THE UNIT OPERATIONS OF SEDIMENTATION, FLOATATION, AND MEMBRANE FILTRATION.

B. REFERENCE STANDARDS:
ASTM C 891: SPECIFICATION FOR INSTALLATION OF UNDERGROUND PRECAST CONCRETE UTILITY STRUCTURES
ASTM C 478: SPECIFICATION FOR PRECAST REINFORCED CONCRETE MANHOLE SECTIONS
ASTM C 990: SPECIFICATION FOR JOINTS FOR CONCRETE MANHOLES USING PREFORMED FLEXIBLE JOINT SEALANTS
ASTM D 4101: SPECIFICATION FOR COPOLYMER STEPS CONSTRUCTION

C. SHOP DRAWINGS: SHOP DRAWINGS FOR THE STRUCTURE AND PERFORMANCE ARE TO BE SUBMITTED WITH EACH ORDER TO THE CONTRACTOR. CONTRACTOR SHALL FORWARD SHOP DRAWING SUBMITTAL TO THE CONSULTING ENGINEER FOR APPROVAL. SHOP DRAWINGS ARE TO DETAIL THE STRUCTURE PRECAST CONCRETE AND CALL OUT OR NOTE THE FIBERGLASS (FRP) INTERNALS/COMPONENTS.

D. PRODUCT SUBSTITUTIONS: NO PRODUCT SUBSTITUTIONS SHALL BE ACCEPTED UNLESS SUBMITTED 10 DAYS PRIOR TO PROJECT BID DATE, OR AS DIRECTED BY THE ENGINEER OF RECORD. SUBMISSIONS FOR SUBSTITUTIONS REQUIRE REVIEW AND APPROVAL BY THE ENGINEER OF RECORD, FOR HYDRAULIC PERFORMANCE, IMPACT TO PROJECT DESIGNS, EQUIVALENT TREATMENT PERFORMANCE, AND ANY REQUIRED PROJECT PLAN AND REPORT (HYDROLOGY/HYDRAULIC, WATER QUALITY, STORMWATER POLLUTION) MODIFICATIONS THAT WOULD BE REQUIRED BY THE APPROVING JURISDICTIONS/AGENCIES. CONTRACTOR TO COORDINATE WITH THE ENGINEER OF RECORD ANY APPLICABLE MODIFICATIONS TO THE PROJECT ESTIMATES OF COST, BONDING AMOUNT DETERMINATIONS, PLAN CHECK FEES FOR CHANGES TO APPROVED DOCUMENTS, AND/OR ANY OTHER REGULATORY REQUIREMENTS RESULTING FROM THE PRODUCT SUBSTITUTION.

E. HANDLING AND STORAGE: PREVENT DAMAGE TO MATERIALS DURING STORAGE AND HANDLING.

PRODUCTS

A. THE DEVICE SHALL BE A CYLINDRICAL OR RECTANGULAR, ALL CONCRETE STRUCTURE (INCLUDING RISERS), CONSTRUCTED FROM PRECAST CONCRETE RISER AND SLAB COMPONENTS OR MONOLITHIC PRECAST STRUCTURE(S), INSTALLED TO CONFORM TO ASTM C 891 AND TO ANY REQUIRED STATE HIGHWAY, MUNICIPAL OR LOCAL SPECIFICATIONS; WHICHEVER IS MORE STRINGENT. THE DEVICE SHALL BE WATERTIGHT.

B. THE CYLINDRICAL CONCRETE DEVICE SHALL INCLUDE A FIBERGLASS CARTRIDGE DECK INSERT. THE RECTANGULAR CONCRETE DEVICE SHALL INCLUDE A COATED ALUMINUM INSERT. IN EITHER INSTANCE, THE INSERT SHALL BE BOLTED AND SEALED WATERTIGHT INSIDE THE PRECAST CONCRETE CHAMBER. THE INSERT SHALL SERVE AS: (A) A HORIZONTAL DIVIDER BETWEEN THE LOWER TREATMENT ZONE AND THE UPPER TREATED EFFLUENT ZONE; (B) A DECK FOR ATTACHMENT OF FILTER CARTRIDGES SUCH THAT THE MEMBRANE FILTER ELEMENTS OF EACH CARTRIDGE EXTEND INTO THE LOWER TREATMENT ZONE; (C) A PLATFORM FOR MAINTENANCE WORKERS TO SERVICE THE FILTER CARTRIDGES (MAXIMUM MANNED WEIGHT = 450 POUNDS); (D) A CONDUIT FOR CONVEYANCE OF TREATED WATER TO THE EFFLUENT PIPE.

C. MEMBRANE FILTER CARTRIDGES SHALL BE COMPRISED OF REUSABLE CYLINDRICAL MEMBRANE FILTER ELEMENTS CONNECTED TO A PERFORATED HEAD PLATE. THE NUMBER OF MEMBRANE FILTER ELEMENTS PER CARTRIDGE SHALL BE A MINIMUM OF ELEVEN 2.75-INCH (70-MM) OR GREATER DIAMETER ELEMENTS. THE LENGTH OF EACH FILTER ELEMENT SHALL BE A MINIMUM 15 INCHES (381 MM). EACH CARTRIDGE SHALL BE FITTED INTO THE CARTRIDGE DECK BY INSERTION INTO A CARTRIDGE RECEPTACLE THAT IS PERMANENTLY MOUNTED INTO THE CARTRIDGE DECK. EACH CARTRIDGE SHALL BE SECURED BY A CARTRIDGE LID THAT IS THREADED ONTO THE RECEPTACLE, OR SIMILAR MECHANISM TO SECURE THE CARTRIDGE INTO THE DECK. THE MAXIMUM TREATMENT FLOW RATE OF A FILTER CARTRIDGE SHALL BE CONTROLLED BY AN ORIFICE IN THE CARTRIDGE LID, OR ON THE INDIVIDUAL CARTRIDGE ITSELF, AND BASED ON A DESIGN FLUX RATE (SURFACE LOADING RATE) DETERMINED BY THE MAXIMUM TREATMENT FLOW RATE PER UNIT OF FILTRATION MEMBRANE SURFACE AREA. THE MAXIMUM FLUX RATE SHALL BE 0.21 GPM/FT2 (0.142 LPS/M2). EACH MEMBRANE FILTER CARTRIDGE SHALL ALLOW FOR MANUAL INSTALLATION AND REMOVAL.

D. ALL FILTER CARTRIDGES AND MEMBRANES SHALL BE REUSABLE AND ALLOW FOR THE USE OF FILTRATION MEMBRANE RINSING PROCEDURES TO RESTORE FLOW CAPACITY AND SEDIMENT CAPACITY; EXTENDING CARTRIDGE SERVICE LIFE.

E. ACCESS SHALL HAVE A MINIMUM CLEAR HEIGHT OF 60" OVER ALL OF THE FILTER CARTRIDGES, OR BE ACCESSIBLE BY A HATCH OR OTHER MECHANISM THAT PROVIDES MINIMUM 60" VERTICAL CLEAR SPACE OVER ALL OF THE FILTER CARTRIDGES. FILTER CARTRIDGES SHALL BE ABLE TO BE LIFTED STRAIGHT VERTICALLY OUT OF THE RECEPTACLES AND DECK FOR THE ENTIRE LENGTH OF THE CARTRIDGE.

F. THE DEVICE SHALL INCLUDE A MINIMUM 24 INCHES (610 MM) OF SUMP BELOW THE BOTTOM OF THE CARTRIDGES FOR SEDIMENT ACCUMULATION, UNLESS OTHERWISE SPECIFIED BY THE DESIGN ENGINEER. DEPTHS LESS THAN 24" MAY HAVE AN IMPACT ON THE TOTAL PERFORMANCE AND/OR LONGEVITY BETWEEN CARTRIDGE MAINTENANCE/REPLACEMENT OF THE DEVICE.

G. ALL PRECAST CONCRETE COMPONENTS SHALL BE MANUFACTURED TO A MINIMUM LIVE LOAD OF HS-20 TRUCK LOADING OR GREATER BASED ON LOCAL REGULATORY SPECIFICATIONS, UNLESS OTHERWISE MODIFIED OR SPECIFIED BY THE DESIGN ENGINEER, AND SHALL BE WATERTIGHT.

H. GASKETS AND/OR SEALANTS TO PROVIDE WATER TIGHT SEAL BETWEEN CONCRETE JOINTS. JOINTS SHALL BE SEALED WITH PREFORMED JOINT SEALING COMPOUND CONFORMING TO ASTM C 990.

I. FRAME AND COVERS MUST BE MANUFACTURED FROM CAST-IRON OR OTHER COMPOSITE MATERIAL TESTED TO WITHSTAND H-20 OR GREATER DESIGN LOADS, AND AS APPROVED BY THE LOCAL REGULATORY BODY. FRAMES AND COVERS MUST BE EMBOSSED WITH THE NAME OF THE DEVICE MANUFACTURER OR THE DEVICE BRAND NAME.

J. DOOR AND HATCHES, IF PROVIDED SHALL MEET DESIGNATED LOADING REQUIREMENTS OR AT A MINIMUM FOR INCIDENTAL VEHICULAR TRAFFIC.

K. ALL CONCRETE COMPONENTS SHALL BE MANUFACTURED ACCORDING TO LOCAL SPECIFICATIONS AND SHALL MEET THE REQUIREMENTS OF ASTM C 478.

L. THE FIBERGLASS PORTION OF THE FILTER DEVICE SHALL BE CONSTRUCTED IN ACCORDANCE WITH THE FOLLOWING STANDARD: ASTM D-4097: CONTACT MOLDED GLASS FIBER REINFORCED CHEMICAL RESISTANT TANKS.

M. STEPS SHALL BE CONSTRUCTED ACCORDING TO ASTM D4101 OF COPOLYMER POLYPROPYLENE, AND BE DRIVEN INTO PREFORMED OR PRE-DRILLED HOLES AFTER THE CONCRETE HAS CURED, INSTALLED TO CONFORM TO APPLICABLE SECTIONS OF STATE, PROVINCIAL AND MUNICIPAL BUILDING CODES, HIGHWAY, MUNICIPAL OR LOCAL SPECIFICATIONS FOR THE CONSTRUCTION OF SUCH DEVICES.

N. ALL PRECAST CONCRETE SECTIONS SHALL BE INSPECTED TO ENSURE THAT DIMENSIONS, APPEARANCE AND QUALITY OF THE PRODUCT MEET LOCAL MUNICIPAL SPECIFICATIONS AND ASTM C 478.

PERFORMANCE

A. THE STORMWATER QUALITY FILTER TREATMENT DEVICE SHALL FUNCTION TO REMOVE POLLUTANTS BY THE FOLLOWING UNIT TREATMENT PROCESSES; SEDIMENTATION, FLOATATION, AND MEMBRANE FILTRATION.

B. THE STORMWATER QUALITY FILTER TREATMENT DEVICE SHALL REMOVE OIL, DEBRIS, TRASH, COARSE AND FINE PARTICULATES, PARTICULATE-BOUND POLLUTANTS, METALS AND NUTRIENTS FROM STORMWATER DURING RUNOFF EVENTS.

C. THE STORMWATER QUALITY FILTER TREATMENT DEVICE SHALL TYPICALLY UTILIZE AN EXTERNAL BYPASS TO DIVERT EXCESSIVE FLOWS. INTERNAL BYPASS SYSTEMS SHALL BE EQUIPPED WITH A FLOATABLES BAFFLE, AND MUST PASS WATER OVER THE CARTRIDGE DECK, AND AVOID PASSAGE THROUGH THE SUMP AND/OR CARTRIDGE FILTRATION ZONE.

D. THE STORMWATER QUALITY FILTER TREATMENT DEVICE SHALL TREAT 100% OF THE REQUIRED WATER QUALITY TREATMENT FLOW BASED ON A MAXIMUM TREATMENT FLUX RATE (SURFACE LOADING RATE) ACROSS THE MEMBRANE FILTER CARTRIDGES NOT TO EXCEED 0.21 GPM/FT2 (0.142 LPS/M2).

E. AT A MINIMUM, THE STORMWATER QUALITY FILTER DEVICE SHALL HAVE BEEN FIELD TESTED AND VERIFIED WITH A MINIMUM 25 QUALIFYING STORM EVENTS AND FIELD MONITORING CONDUCTED ACCORDING TO THE TARP TIER II OR TAPE FIELD TEST PROTOCOL, AND HAVE RECEIVED NJCAT VERIFICATION.

F. THE STORMWATER QUALITY FILTER TREATMENT DEVICE SHALL HAVE DEMONSTRATED A MINIMUM MEDIAN TSS REMOVAL EFFICIENCY OF 85% AND A MINIMUM MEDIAN SSC REMOVAL EFFICIENCY OF 95%.

G. THE STORMWATER QUALITY FILTER TREATMENT DEVICE SHALL HAVE DEMONSTRATED THE ABILITY TO CAPTURE FINE PARTICLES AS INDICATED BY A MINIMUM MEDIAN REMOVAL EFFICIENCY OF 75% FOR THE PARTICLE FRACTION LESS THAN 25 MICRONS, AN EFFLUENT D50 OF 15 MICRONS OR LOWER FOR ALL MONITORED STORM EVENTS, AND AN EFFLUENT TURBIDITY OF 15 NTUS OR LOWER.

H. THE STORMWATER QUALITY FILTER TREATMENT DEVICE SHALL HAVE DEMONSTRATED A MINIMUM MEDIAN TOTAL PHOSPHORUS REMOVAL OF 55%, AND A MINIMUM MEDIAN TOTAL NITROGEN REMOVAL OF 50%.

I. THE STORMWATER QUALITY FILTER TREATMENT DEVICE SHALL HAVE DEMONSTRATED A MINIMUM MEDIAN TOTAL ZINC REMOVAL OF 50%, AND A MINIMUM MEDIAN TOTAL COPPER REMOVAL OF 75%.

INSPECTION AND MAINTENANCE

A. DURABILITY OF MEMBRANES ARE SUBJECT TO GOOD HANDLING PRACTICES DURING INSPECTION AND MAINTENANCE (REMOVAL, RINSING, AND REINSERTION) EVENTS, AND SITE SPECIFIC CONDITIONS THAT MAY HAVE HEAVIER OR LIGHTER LOADING ONTO THE CARTRIDGES, AND POLLUTANT VARIABILITY THAT MAY IMPACT THE MEMBRANE STRUCTURAL INTEGRITY. MEMBRANE MAINTENANCE AND REPLACEMENT SHALL BE IN ACCORDANCE WITH MANUFACTURER'S RECOMMENDATIONS.

B. INSPECTION WHICH INCLUDES TRASH AND FLOATABLES COLLECTION, SEDIMENT DEPTH DETERMINATION, AND VISIBLE DETERMINATION OF BACKWASH POOL DEPTH SHALL BE EASILY CONDUCTED FROM GRADE (OUTSIDE THE STRUCTURE).

C. MANUAL RINSING OF THE REUSABLE FILTER CARTRIDGES SHALL PROMOTE RESTORATION OF THE FLOW CAPACITY AND SEDIMENT CAPACITY OF THE FILTER CARTRIDGES, EXTENDING CARTRIDGE SERVICE LIFE.

D. SEDIMENT REMOVAL FROM THE FILTER TREATMENT DEVICE SHALL BE ABLE TO BE CONDUCTED USING A STANDARD MAINTENANCE TRUCK AND VACUUM APPARATUS, AND A MINIMUM ONE POINT OF ENTRY TO THE SUMP THAT IS UNOBSTRUCTED BY FILTER CARTRIDGES.

E. MAINTENANCE ACCESS SHALL HAVE A MINIMUM CLEAR HEIGHT OF 60" OVER ALL OF THE FILTER CARTRIDGES, OR BE ACCESSIBLE BY A HATCH OR OTHER MECHANISM THAT PROVIDES MINIMUM 60" VERTICAL CLEAR SPACE OVER ALL OF THE FILTER CARTRIDGES. FILTER CARTRIDGES SHALL BE ABLE TO BE LIFTED STRAIGHT VERTICALLY OUT OF THE RECEPTACLES AND DECK FOR THE ENTIRE LENGTH OF THE CARTRIDGE.

F. FILTER CARTRIDGES SHALL BE ABLE TO BE MAINTAINED WITHOUT THE USE OF ADDITIONAL LIFTING EQUIPMENT.

EXECUTION

A. THE INSTALLATION OF A WATERTIGHT PRECAST CONCRETE DEVICE SHOULD CONFORM TO ASTM C 891 AND TO ANY STATE HIGHWAY, MUNICIPAL OR LOCAL SPECIFICATIONS FOR THE CONSTRUCTION OF MANHOLES, WHICHEVER IS MORE STRINGENT. SELECTED SECTIONS OF A GENERAL SPECIFICATION THAT ARE APPLICABLE ARE SUMMARIZED BELOW.

B. THE WATERTIGHT PRECAST CONCRETE DEVICE IS INSTALLED IN SECTIONS IN THE FOLLOWING SEQUENCE:
- AGGREGATE BASE
- BASE SLAB
- TREATMENT CHAMBER AND CARTRIDGE DECK RISER SECTION(S)
- BYPASS SECTION
- CONNECT INLET AND OUTLET PIPES
- CONCRETE RISER SECTION(S) AND/OR TRANSITION SLAB (IF REQUIRED)
- MAINTENANCE RISER SECTION(S) (IF REQUIRED)
- FRAME AND ACCESS COVER

C. INLET AND OUTLET PIPES SHOULD BE SECURELY SET INTO THE DEVICE USING APPROVED PIPE SEALS (FLEXIBLE BOOT CONNECTIONS, WHERE APPLICABLE) SO THAT THE STRUCTURE IS WATERTIGHT, AND SUCH THAT ANY PIPE INTRUSION INTO THE DEVICE DOES NOT IMPACT THE DEVICE FUNCTIONALITY.

D. ADJUSTMENT UNITS (E.G. GRADE RINGS) SHOULD BE INSTALLED TO SET THE FRAME AND COVER AT THE REQUIRED ELEVATION. THE ADJUSTMENT UNITS SHOULD BE LAID IN A FULL BED OF MORTAR WITH SUCCESSIVE UNITS BEING JOINED USING SEALANT RECOMMENDED BY THE MANUFACTURER. FRAMES FOR THE COVER SHOULD BE SET IN A FULL BED OF MORTAR AT THE ELEVATION SPECIFIED.

E. IN SOME INSTANCES THE MAINTENANCE ACCESS WALL, IF PROVIDED, SHALL REQUIRE AN EXTENSION ATTACHMENT AND SEALING TO THE PRECAST WALL AND CARTRIDGE DECK AT THE JOB SITE, RATHER THAN AT THE PRECAST FACILITY. IN THIS INSTANCE, INSTALLATION OF THESE COMPONENTS SHALL BE PERFORMED ACCORDING TO INSTRUCTIONS PROVIDED BY THE MANUFACTURER.

F. FILTER CARTRIDGES SHALL BE INSTALLED IN THE CARTRIDGE DECK AFTER THE CONSTRUCTION SITE IS FULLY STABILIZED AND IN ACCORDANCE WITH THE MANUFACTURERS GUIDELINES AND RECOMMENDATIONS. CONTRACTOR TO CONTACT THE MANUFACTURER TO SCHEDULE CARTRIDGE DELIVERY AND REVIEW PROCEDURES/REQUIREMENTS TO BE COMPLETED TO THE DEVICE PRIOR TO INSTALLATION OF THE CARTRIDGES AND ACTIVATION OF THE SYSTEM.

G. MANUFACTURER SHALL COORDINATE DELIVERY OF FILTER CARTRIDGES AND OTHER INTERNAL COMPONENTS WITH CONTRACTOR. FILTER CARTRIDGES SHALL BE DELIVERED AND INSTALLED COMPLETE AFTER SITE IS STABILIZED AND UNIT IS READY TO ACCEPT CARTRIDGES. UNIT IS READY TO ACCEPT CARTRIDGES AFTER IS HAS BEEN CLEANED OUT AND ANY STANDING WATER, DEBRIS, AND OTHER MATERIALS HAVE BEEN REMOVED. CONTRACTOR SHALL TAKE APPROPRIATE ACTION TO PROTECT THE FILTER CARTRIDGE RECEPTACLES AND FILTER CARTRIDGES FROM DAMAGE DURING CONSTRUCTION, AND IN ACCORDANCE WITH THE MANUFACTURER'S RECOMMENDATIONS AND GUIDANCE. FOR SYSTEMS WITH CARTRIDGES INSTALLED PRIOR TO FULL SITE STABILIZATION AND PRIOR TO SYSTEM ACTIVATION, THE CONTRACTOR CAN PLUG INLET AND OUTLET PIPES TO PREVENT STORMWATER AND OTHER INFLUENT FROM ENTERING THE DEVICE. PLUGS MUST BE REMOVED DURING THE ACTIVATION PROCESS.

H. THE MANUFACTURER SHALL PROVIDE AN OWNER'S MANUAL UPON REQUEST.

I. AFTER CONSTRUCTION AND INSTALLATION, AND DURING OPERATION, THE DEVICE SHALL BE INSPECTED AND CLEANED AS NECESSARY BASED ON THE MANUFACTURER'S RECOMMENDED INSPECTION AND MAINTENANCE GUIDELINES AND THE LOCAL REGULATORY AGENCY/BODY.

J. WHEN REPLACEMENT MEMBRANE FILTER ELEMENTS AND/OR OTHER PARTS ARE REQUIRED, ONLY MEMBRANE FILTER ELEMENTS AND PARTS APPROVED BY THE MANUFACTURER FOR USE WITH THE STORMWATER QUALITY FILTER DEVICE SHALL BE INSTALLED.

END OF SECTION

The design and information shown on this drawing is provided as a service to the project owner, engineer and contractor. Imbrium Systems (Products) neither the drawing, nor any part thereof, may be used, reproduced or modified in any manner without the prior written consent of Imbrium. Failure to comply is done at the user's own risk and Imbrium expressly disclaims any liability or responsibility for such use.

If discrepancies between the supplied information upon which the drawing is based and actual field conditions are encountered as site work progresses, these discrepancies must be reported to Imbrium immediately for re-evaluation of the design. Imbrium accepts no liability for designs based on missing, incomplete or inaccurate information supplied by others.

MARK	DATE	REVISION DESCRIPTION	BY
#	#	#	#
#	#	#	#
#	#	#	#
#	#	#	#
0	10/01/2014	INTIAL RELEASE	BSF

JELLYFISH FILTER SPECIFICATIONS

Jellyfish®

JF6 STANDARD

Scale = 1:50

www.imbriumsystems.com info@imbriumsystems.com

imbrium®

407 FAIRVIEW DRIVE, WHITBY, ON L1N 3A9

TF 800-565-4801 CA 416-960-9900 INTL +1-416-960-9900

Jellyfish® Filter

THIS PRODUCT MAY BE PROTECTED BY ONE OR MORE OF THE FOLLOWING U.S. PATENTS: 7,425,262 B2 9/2008; 7,470,371 B2 12/2008; 7,563,365 B2 7/2009; 7,686,939 B2 3/2010; AND OTHER PATENTS PENDING. PLEASE VISIT WWW.IMBRIUMSYSTEMS.COM FOR UPDATED INFORMATION.

DATE: ########	
DESIGNED:	DRAWN: BSF
CHECKED: BSF	APPROVED: SP
PROJECT #: #####	PROJECT NAME: #####
SHEET: 2 OF 2	

I:\IMBRIUM\PRODUCTS\JELLYFISH FILTER\40 DRAWINGS & DETAILS\STANDARD DETAILS\JELLYFISH FILTER - OFFLINE\JELLYFISH FILTER JF6 - OFFLINE DIVERSION MANHOLE.DWG 4/15/2019 9:21 AM